FOR-1758 Rev.1.1

未注公差/General tolerances(mm)															
0 ~ 3	>3 ~ 6	>6 ~ 10	>10 ~ 18	>18 ~ 30	>30 ~ 50	>50 ~ 80	>80 ~ 120	>120 ~ 180	>180 ~ 250	>250 ~ 315	>315 ~ 400	>400 ~ 500	>500	0.1/10
±0.12	±0.18	±0.22	±0.26	±0.31	±0.37	±0.57	±0.80	±0.93	±1.05	±1.15	±1.60	±2.20	±2.50	±2°

PCB LAYOUT

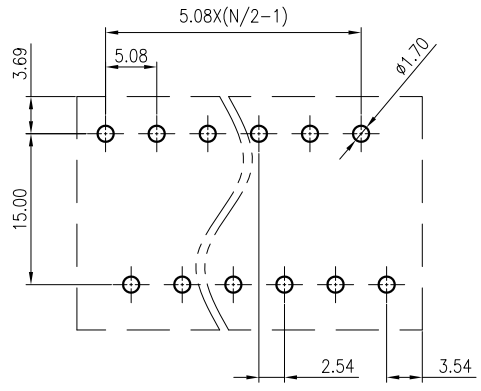

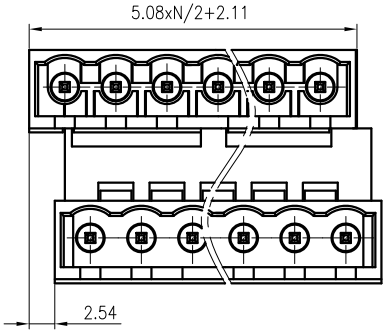

文管中心 研发专用
2020. 05. 18
(仅限内部使用,对外无效)

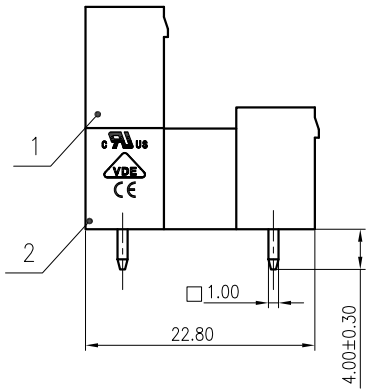

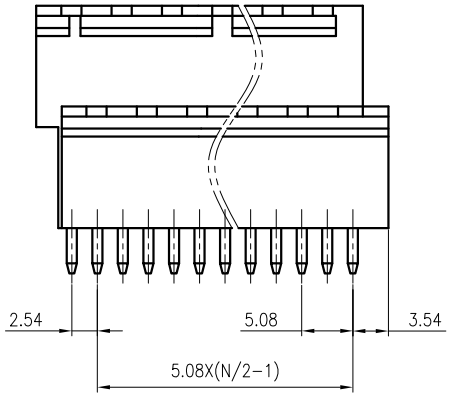

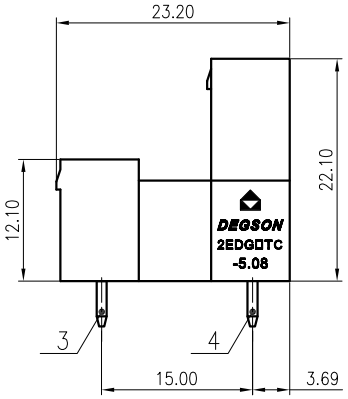

ITEM	NAME OF PART	MATERIAL	NOTES
4	Pin header 2	Copper alloy	Sn Plated
3	Pin header 1	Copper alloy	Sn Plated
2	Cover	PA66	UL94V-0
1	Housing	PA66	UL94V-0

	B	C	D
UL 标准/UL Standard:			
额定电压/电流/Rated Voltage(V)/Current(A)	300/15	/	300/10
EC 标准/IEC Standard:			
过压类别/Overvoltage Category/污染等级/Pollution Degree	III/3	III/2	II/2
额定电压/电流/Rated Voltage(V)/Current(A)	/	320/10	/
额定脉冲电压(KV)/Rate Impulse Voltage(KV)	/	4	/
线数范围/Poles	N=04~48P		
使用温度范围/Operating temperature(°C)	-40~+105		
符合RoHS环保要求/Conform to RoHS	Yes		

REV	ECN	DESCRIPTION	DRFT	DATE

MATERIAL: / SURFACE: /

MAT NO.: /

STATUS: /

APPD: Lan ChH 2020.05.18

CHKD: /

DRFT: ZhangX 2017.04.26

DEGSON® 宁波高松电子有限公司 NINGBO DEGSON ELECTRICAL CO., LTD

NAME: 2EDGVTC-5.08-XXP-1Y-00A(H)

DRAWING NO.: 2EDGVTC-5.08-C02 REV T1

SIZE: A3 mm (inch) TYPE: CUSTOMER DRAWING SCALE: 2:1 SHEET 1/1