FOR-1754 Rev.1.1

未注公差/General tolerances(mm)														
0 ~ 3	>3 ~ 6	>6 ~ 10	>10 ~ 18	>18 ~ 30	>30 ~ 50	>50 ~ 80	>80 ~ 120	>120 ~ 180	>180 ~ 250	>250 ~ 315	>315 ~ 400	>400 ~ 500	>500	0.1/10
±0.12	±0.18	±0.22	±0.26	±0.31	±0.37	±0.57	±0.80	±0.93	±1.05	±1.15	±1.60	±2.20	±2.50	±2°

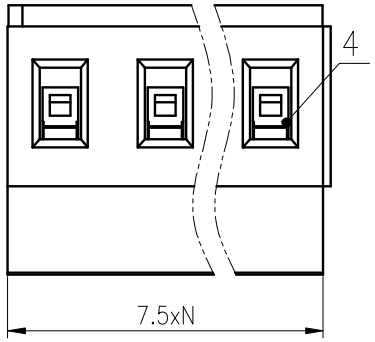

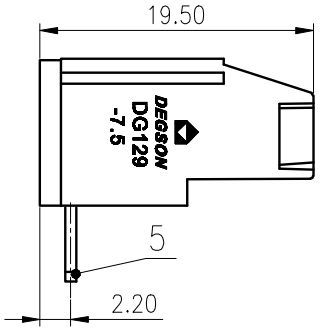

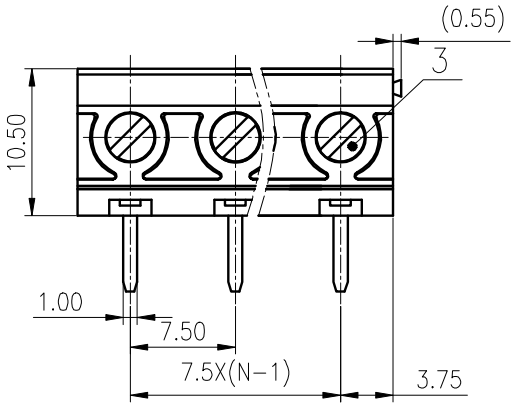

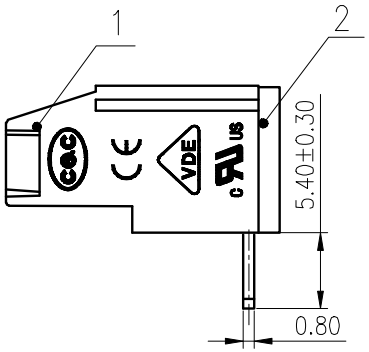

ITEM	NAME OF PART	MATERIAL	NOTES
5	Pin header	Copper alloy	Sn plated
4	Cage	Copper alloy	M3/Ni plated
3	Screw	Steel	M3/Zn plated
2	Cover	PA66	UL94V-0
1	Housing	PA66	UL94V-0

	B	C	D
UL 标准/UL Standard:			
额定电压/电流/Rated Voltage(V)/Current(A)	300/20	/	300/10

IEC 标准/IEC Standard:	
额定电压/电流/Rated Voltage(V)/Current(A)	450/20
工频耐压/Withstanding voltage(V/1Min)	AC2000
螺丝扭矩/Torque Tightening(N·m/Lb.in)	M3, 0.5/4.43
线径范围(硬线和软线)/Wire Range(rigid and flexible)(mm^2/AWG)	0.5~2.5/26~12
间距/Pitch(mm)/线数范围/Poles	7.5/N=02~16P
剥线长度/Stripping length(mm)	8
使用温度范围/Operating temperature(°C)	-40~+105
符合RoHS环保要求/Conform to RoHS	Yes

PCB LAYOUT

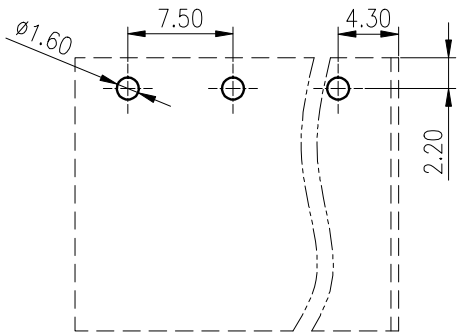

REV	ECN	DESCRIPTION	DRFT	DATE

MATERIAL: / SURFACE: /

MAT NO.: /

STATUS: /

APPD: LanChH 2020.05.16

CHKD: YuJZ 2020.05.16

DRFT: ChenZh 2020.05.16

DEGSON® 宁波高松电子有限公司 NINGBO DEGSON ELECTRICAL CO., LTD

NAME: DG129R-7.5-XXP-1Y-00A(H)

DRAWING NO.: 10001989 REV T0

SIZE: A4 mm (inch) TYPE: CUSTOMER DRAWING SCALE: 2:1 SHEET 1/1